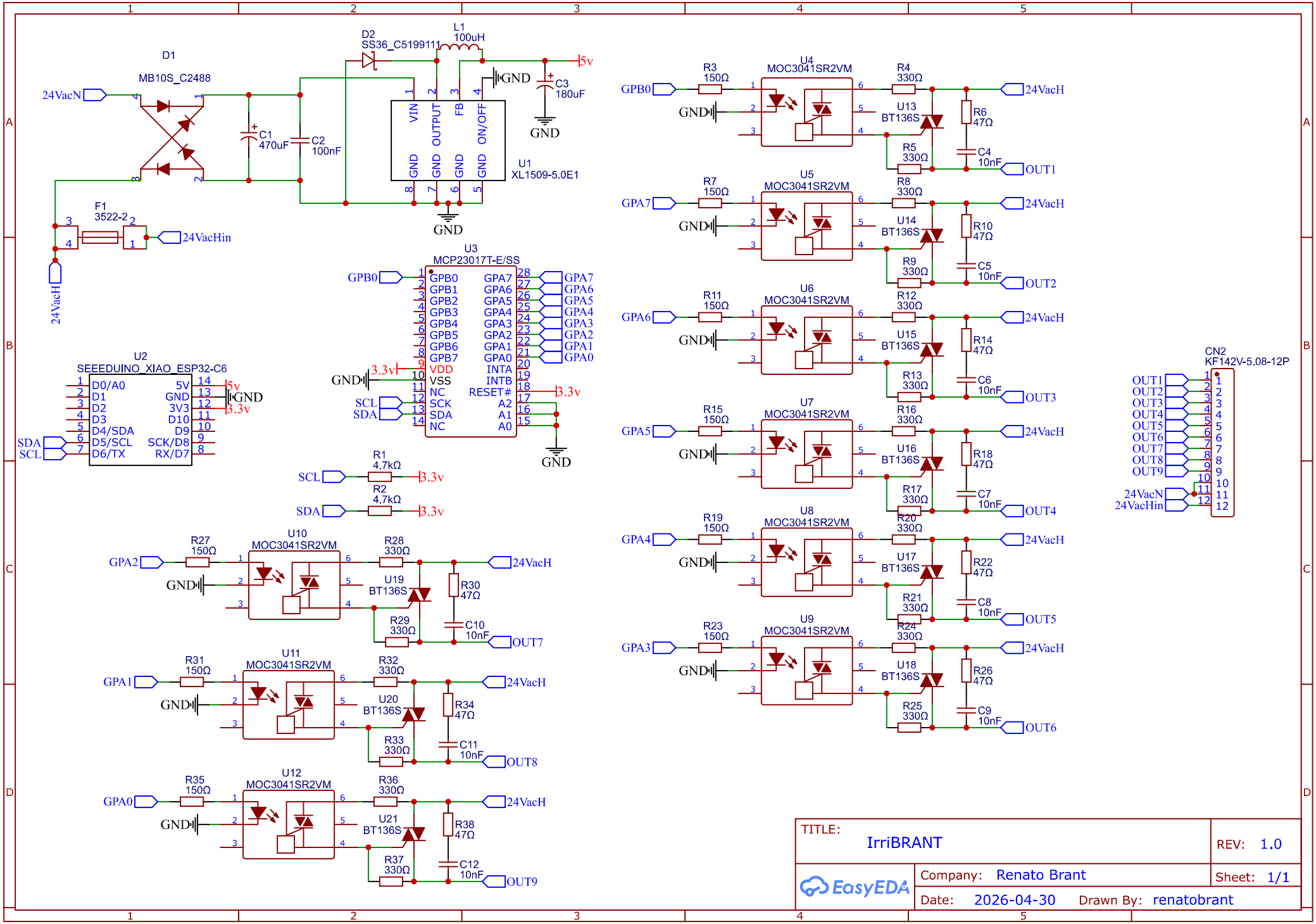
D1
MB10S_C2488
24VacN
C1
470uF
C2
100nF
D2
SS36_C5199111
L1
100uH
5v
C3
180uF
GND
VIN
OUTPUT
FB
ON/OFF
GND
GND
GND
GND
U1
XL1509-5.0E1
F1
3522-2
24VacHin
24VacH
U3
MCP23017T-E/SS
GPB0
GPB1
GPB2
GPB3
GPB4
GPB5
GPB6
GPB7
VDD
VSS
NC
SCK
SDA
NC
GPA7
GPA6
GPA5
GPA4
GPA3
GPA2
GPA1
GPA0
INTA
INTB
RESET#
A2
A1
A0
3.3v
SCL
SDA
U2
SEEEDUINO_XIAO_ESP32-C6
D0/A0
D1
D2
D3
D4/SDA
D5/SCL
D6/TX
5V
GND
3V3
D10
D9
SCK/D8
RX/D7
R1
4.7kΩ
R2
4.7kΩ
U4
MOC3041SR2VM
U13
BT136S
U5
MOC3041SR2VM
U14
BT136S
U6
MOC3041SR2VM
U15
BT136S
U7
MOC3041SR2VM
U16
BT136S
U8
MOC3041SR2VM
U17
BT136S
U9
MOC3041SR2VM
U18
BT136S
U10
MOC3041SR2VM
U19
BT136S
U11
MOC3041SR2VM
U20
BT136S
U12
MOC3041SR2VM
U21
BT136S
R3 150Ω
R4 330Ω
R5 330Ω
R6 47Ω
C4 10nF
R7 150Ω
R8 330Ω
R9 330Ω
R10 47Ω
C5 10nF
R11 150Ω
R12 330Ω
R13 330Ω
R14 47Ω
C6 10nF
R15 150Ω
R16 330Ω
R17 330Ω
R18 47Ω
C7 10nF
R19 150Ω
R20 330Ω
R21 330Ω
R22 47Ω
C8 10nF
R23 150Ω
R24 330Ω
R25 330Ω
R26 47Ω
C9 10nF
R27 150Ω
R28 330Ω
R29 330Ω
R30 47Ω
C10 10nF
R31 150Ω
R32 330Ω
R33 330Ω
R34 47Ω
C11 10nF
R35 150Ω
R36 330Ω
R37 330Ω
R38 47Ω
C12 10nF
OUT1
OUT2
OUT3
OUT4
OUT5
OUT6
OUT7
OUT8
OUT9
CN2
KF142V-5.08-12P
OUT1
OUT2
OUT3
OUT4
OUT5
OUT6
OUT7
OUT8
OUT9
24VacN
24VacHin
TITLE:
IrriBRANT
REV: 1.0
EasyEDA
Company: Renato Brant
Sheet: 1/1
Date: 2026-04-30
Drawn By: renatobrant